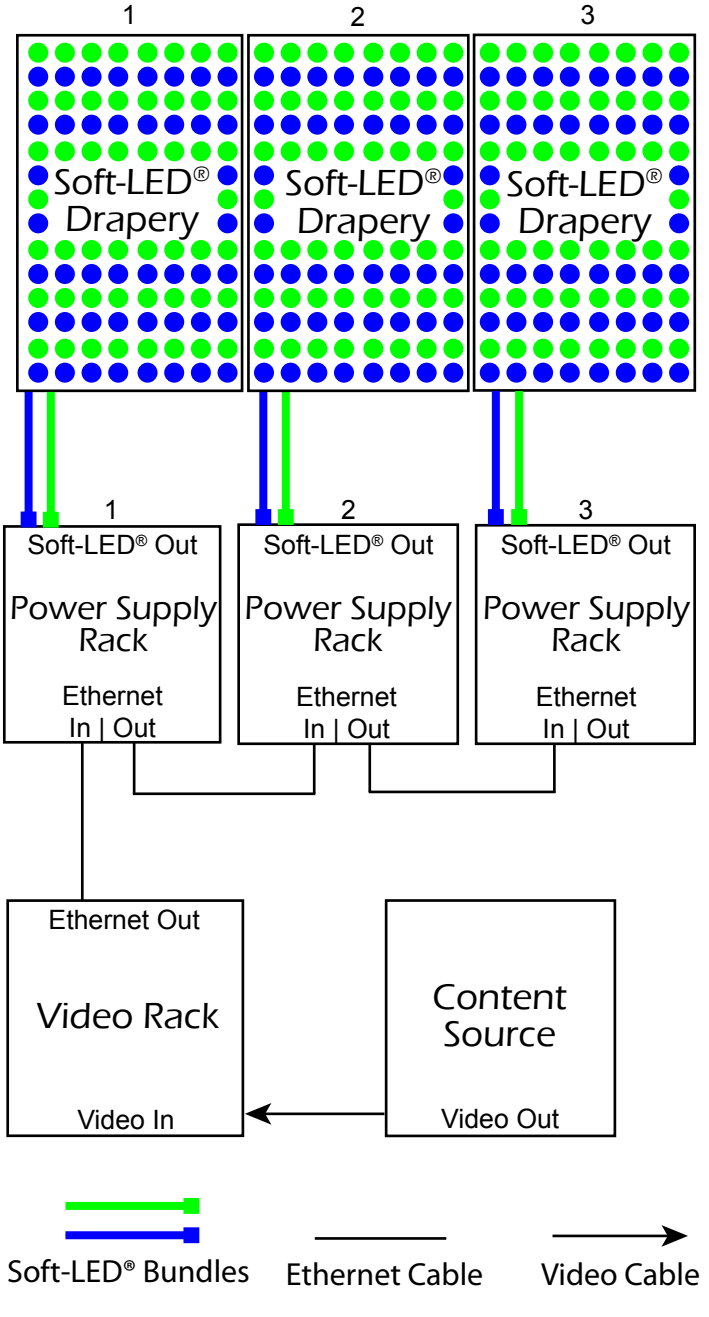Soft-LED®
Sample System Diagram